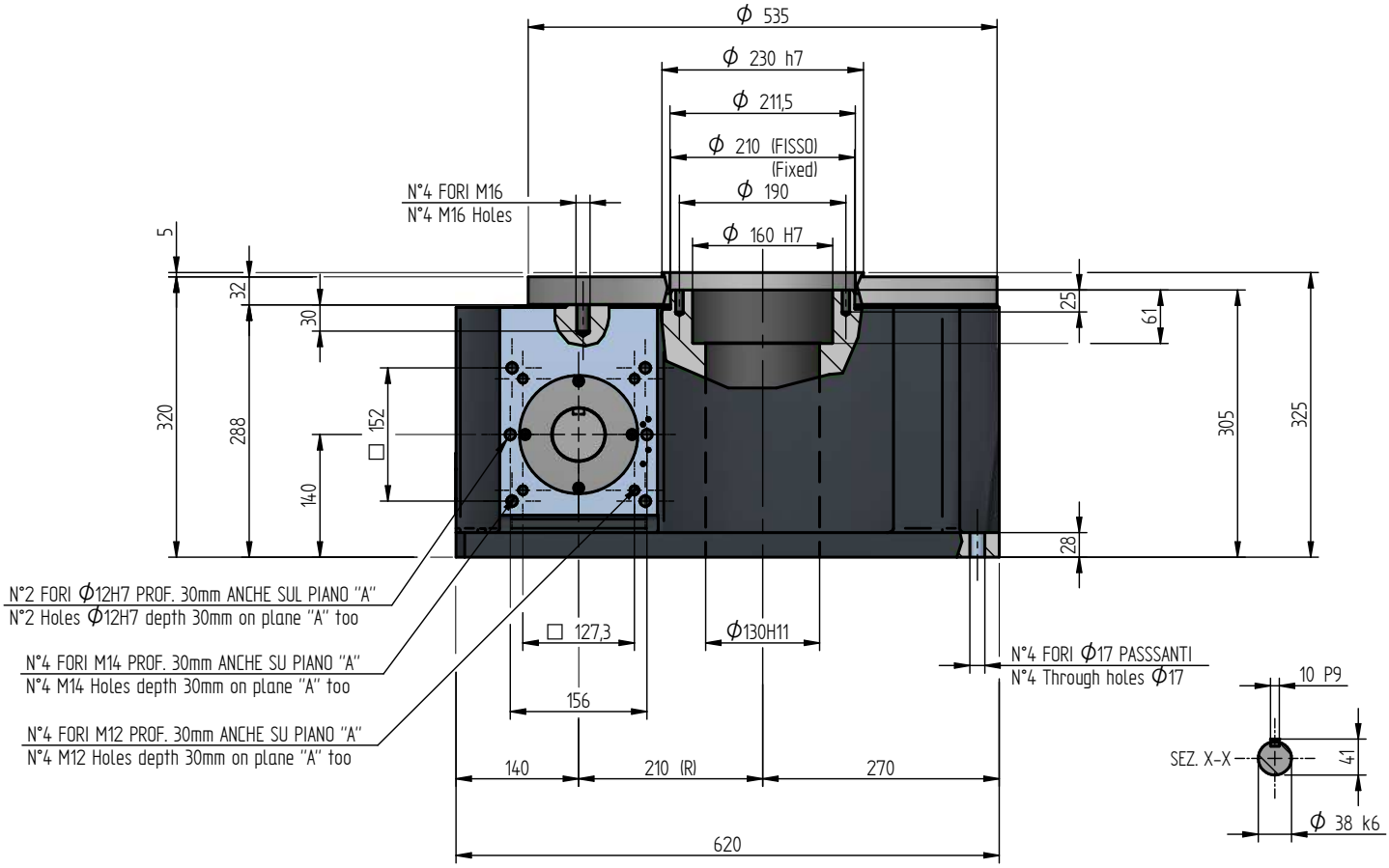
Φ 535
Φ 230 h7
Φ 211,5
Φ 210 (FISSO)
(Fixed)
Φ 190
Φ 160 H7
N°4 FORI M16
N°4 M16 Holes
5
32
30
320
288
140
□ 152
25
61
305
325
28
N°2 FORI Φ12H7 PROF. 30mm ANCHE SUL PIANO "A"
N°2 Holes Φ12H7 depth 30mm on plane "A" too
N°4 FORI M14 PROF. 30mm ANCHE SU PIANO "A"
N°4 M14 Holes depth 30mm on plane "A" too
N°4 FORI M12 PROF. 30mm ANCHE SU PIANO "A"
N°4 M12 Holes depth 30mm on plane "A" too
□ 127,3
Φ130H11
156
140
210 (R)
270
620
N°4 FORI Φ17 PASSSANTI
N°4 Through holes Φ17
10 P9
SEZ. X-X
41
Φ 38 k6

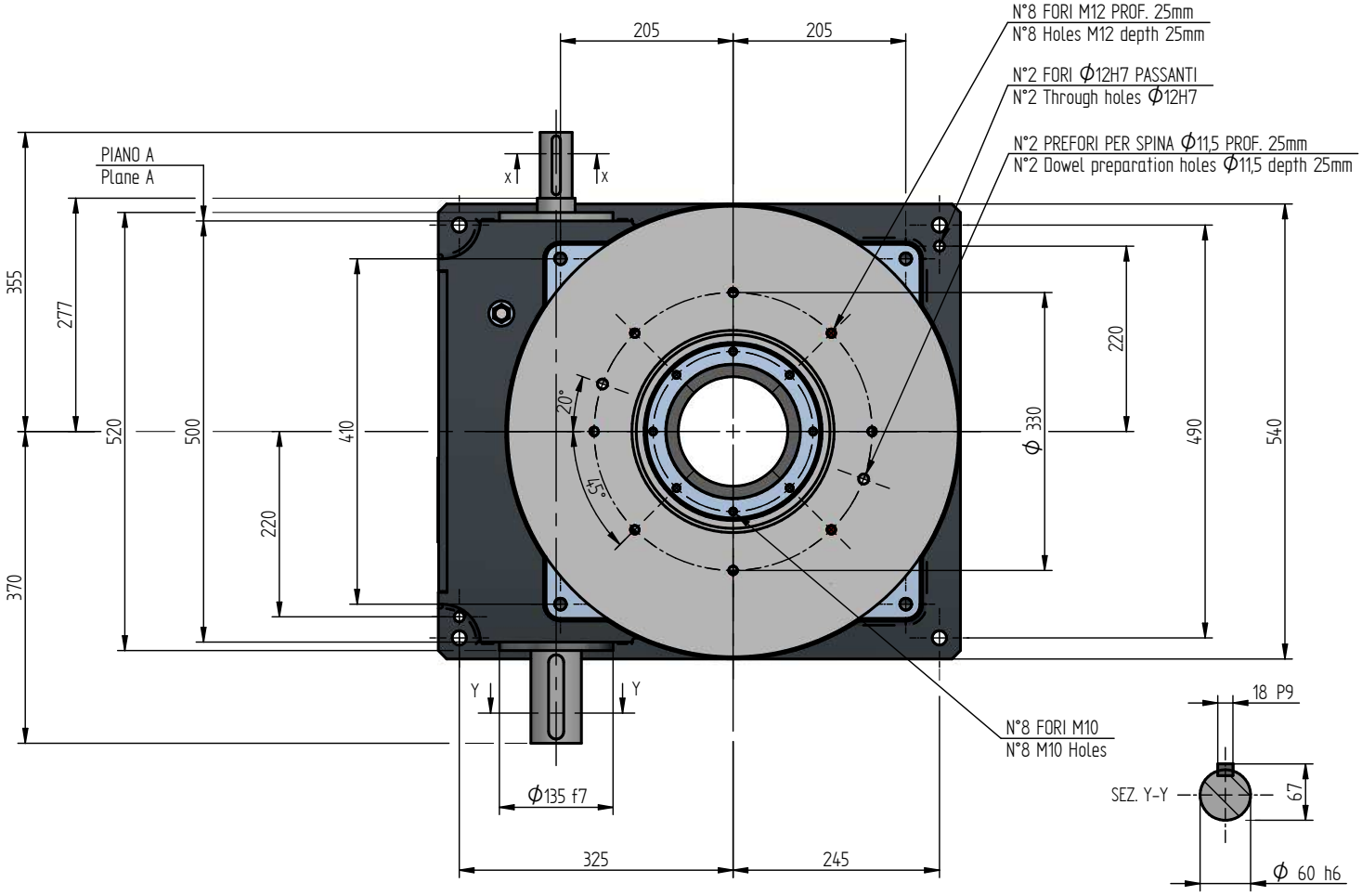
205
205
N°8 FORI M12 PROF. 25mm
N°8 Holes M12 depth 25mm
N°2 FORI Φ12H7 PASSANTI
N°2 Through holes Φ12H7
N°2 PREFORI PER SPINA Φ11,5 PROF. 25mm
N°2 Dowel preparation holes Φ11,5 depth 25mm
PIANO A
Plane A
x
x
355
277
520
500
410
220
370
20°
45°
220
Φ 330
490
540
Y
Y
Φ135 f7
325
245
N°8 FORI M10
N°8 M10 Holes
18 P9
SEZ. Y-Y
67
Φ 60 h6